REVISIONS			
REV	DESCRIPTION	DATE	APPROVED

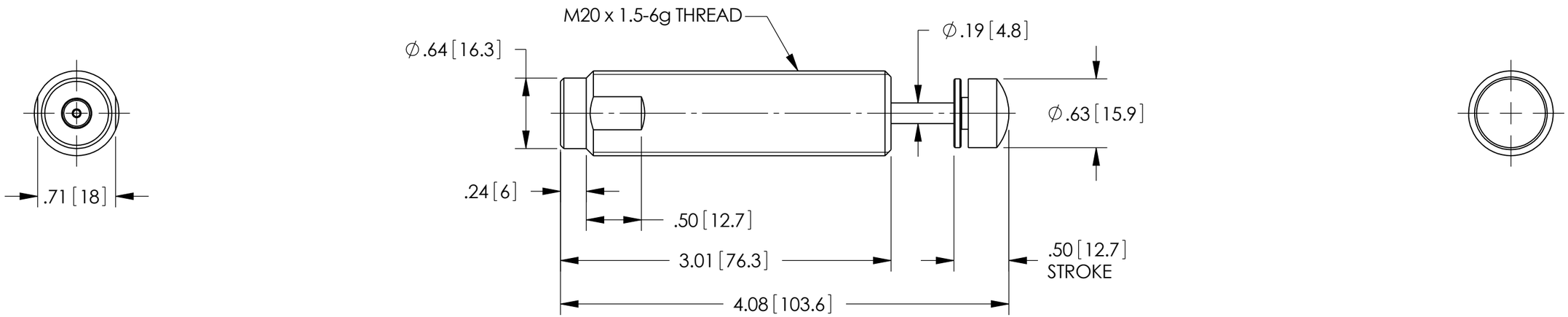

INFORMATION ONLY

8. MATERIALS AND FINISHES
   EXTERNAL SURFACES: NICKEL PLATED STEEL
   PISTON ROD: NICKEL PLATED STEEL

7. NOMINAL COIL SPRING FORCES
   EXTENDED: 1.5 LBS (6.7 N)
   COMPRESSED: 3.5 LBS (15.6 N)

6. MAXIMUM PROPELLING FORCE: 360 LBS (1 600 N).

5. MAXIMUM SHOCK FORCE: 700 LBS (3 115 N).

4. MAXIMUM ENERGY CAPACITY PER HOUR: 400,000 IN-LBS (45 200 Nm).

3. MAXIMUM ENERGY CAPACITY PER CYCLE: 225 IN-LBS (25.4 Nm).

2. OPERATIONAL TEMPERATURE RANGE: 15°F TO 180° F (-10°C TO 80°C).

1. ALL DIMENSIONS ARE NOMINAL AND IN INCHES[mm].

NOTES: UNLESS OTHERWISE SPECIFIED.

CAD GENERATED DRAWING,
DO NOT MANUALLY UPDATE

PART NUMBER: SP23295

DO NOT SCALE PRINT
UNLESS OTHERWISE SPECIFIED
DIMENSIONS ARE IN INCHES
REMOVE ALL BURRS
INTERPRET DIM AND TOL PER ASME Y14.5M - 1994
LIMITS ON FINISHED DIMENSIONS:
TOL ON ANGLE ±

NOTICE: THE INFORMATION CONTAINED IN THIS DRAWING IS PROPRIETARY TO ENIDINE AND SHALL NOT BE DISCLOSED IN WHOLE OR IN PART, OR USED FOR ANY DESIGN OR MANUFACTURE, EXCEPT WHEN SUCH USER POSSESSES DIRECT WRITTEN AUTHORIZATION FROM ENIDINE

THIRD ANGLE PROJECTION

APPROVED	J. Koscielniak	03/05/2012
CHECKED	J. Koscielniak	03/05/2012
DRAWN	A. Henning	05/22/2008
MATERIAL		

ENIDINE
an IDEX Company
ENIDINE INCORPORATED
7 CENTRE DRIVE
ORCHARD PARK, NEW YORK 14127
PHONE: (716) 662-1900

ENVELOPE DRAWING

SPM 50 MC-1B SPECIAL

SIZE	CAGE CODE	DWG NO	REV
B	24403	SP-23295	

SCALE: 1:1 | WEIGHT: | SHEET 1 OF 1

CAD FILE: SP-23295.SLDDRW