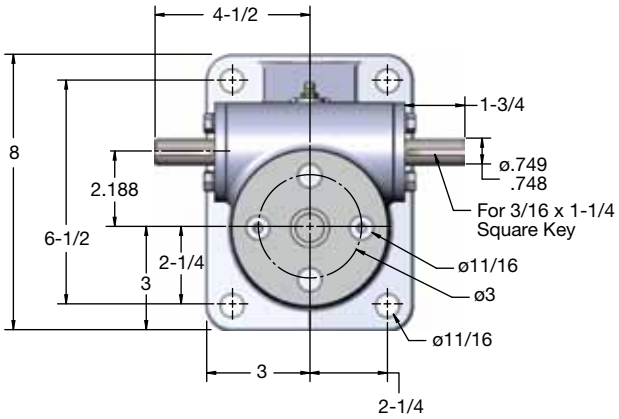

1-1/2"Diameter x .375 Lead Lifting Screws

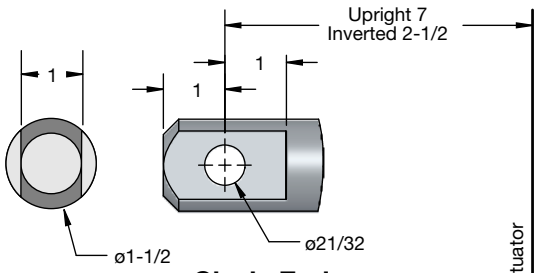

Clevis End

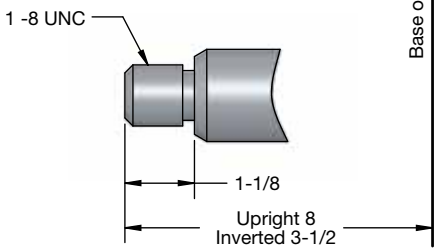

Threaded End

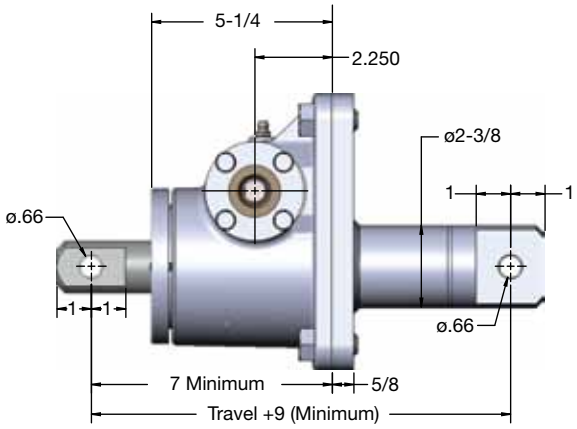

Double Clevis: CCM-9005

Maximum Allowable Raise in Compession 22" - Rating 6500 Lbs.
Maximum Raise at Rated Load in Compression 17"

Note: Lifting screw is not keyed. Top should be secured to a lifting member to prevent rotation. When a Bellows Boot is required, see pages 148-149. Dimensions are subject to change without notice.

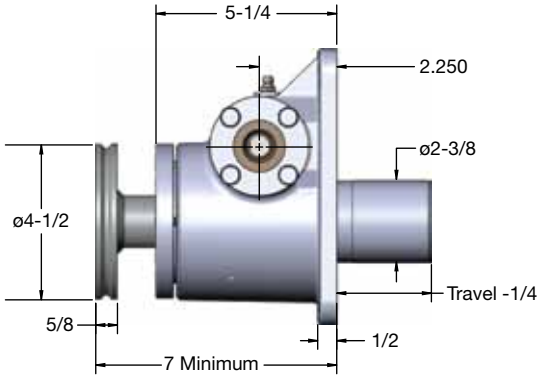

Upright: M-9005

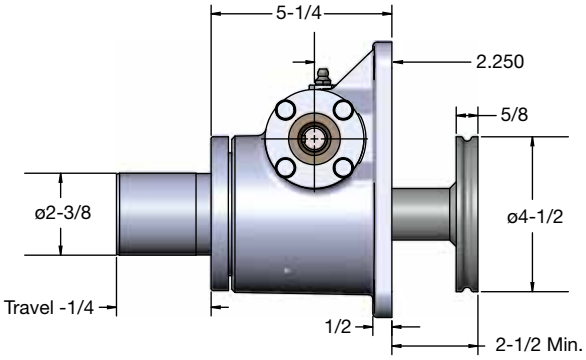

Inverted: M-9004

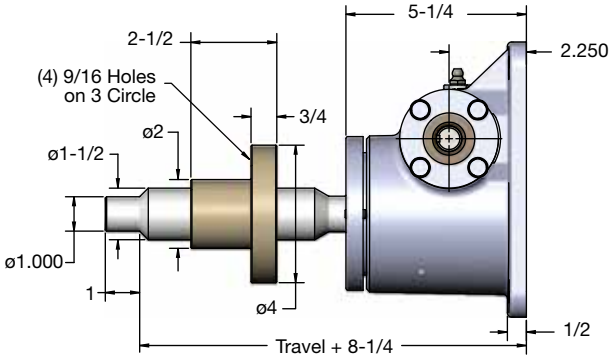

Upright Rotating: UM-9006

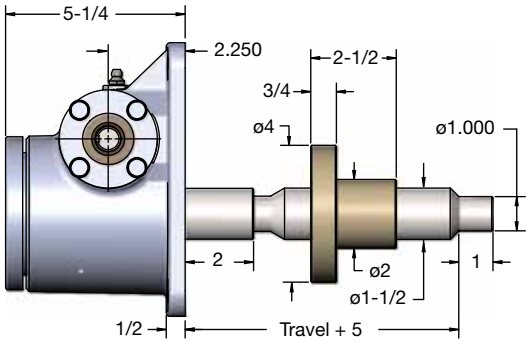

Inverted Rotating: DM-9006